REVISION HISTORY			
REV.	DESCRIPTION	DATE	DRAWN BY
1	DRAFT DESIGN	6/7/2017	K. STAHLECHER
2	ORIGINAL PRINT	10/24/2017	K. STAHLECHER
3	UPDATED DIMENSIONS	7/25/2018	A. SHORES
4	DRAWN TO MEET AMDS-1	1/19/2022	N. MASSOUDA

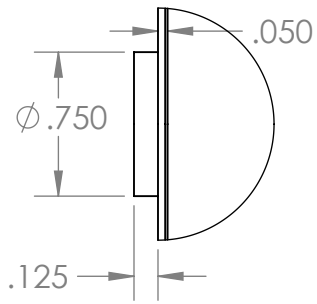

DETAIL B
SCALE 1 : 1

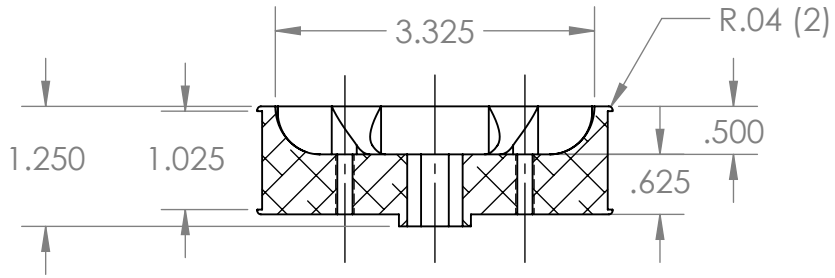

SECTION A-A

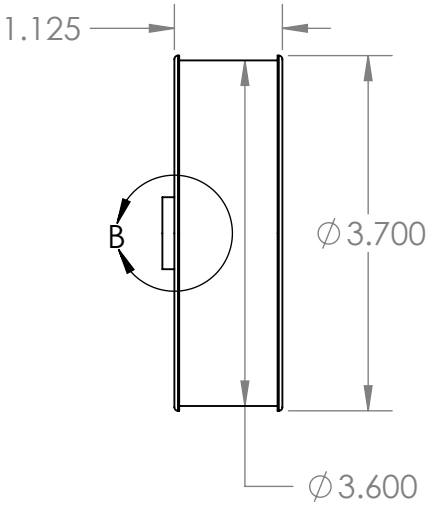

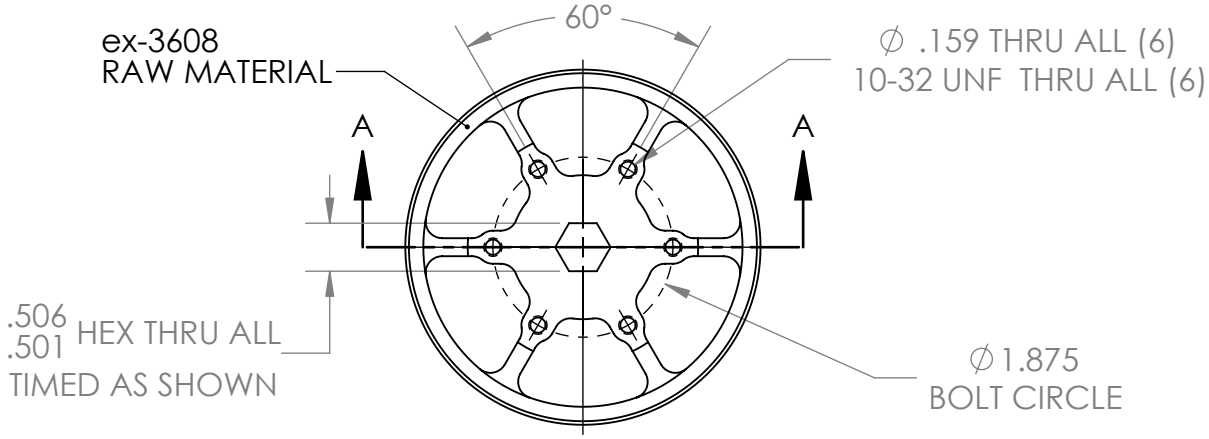

*** SEE CAD FOR ADDITIONAL TOOLPATH INFO***

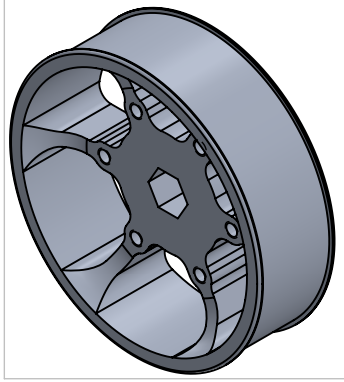

UNLESS OTHERWISE SPECIFIED:		COMMENTS:
DIMENSIONS ARE IN INCHES		DUAL DIMENSIONS ARE IN MILLIMETERS.
TOLERANCES:		BREAK ALL SHARP EDGES
FRACTIONAL	±1/16	
ANGULAR: MACH	±1°	
ANGULAR: BEND	±5°	
ONE PLACE DECIMAL	±0.1	
TWO PLACE DECIMAL	±0.01	
THREE PLACE DECIMAL	±0.005	
FOUR PLACE DECIMAL	±0.0005	
MATERIAL	6061-T6 AL	
FINISH	TUMBLED	
DO NOT SCALE DRAWING		

	NAME	DATE
CHECKED	NL	1/19/22
ENG APPR.		
MFG APPR.		
Q.A.		

AndyMark

TITLE:

4IN PERFORMANCE WHEEL
500IN HEX BORE

SIZE	DWG. NO.	REV
A	am-3608	4

SCALE: 1:2 | WEIGHT: | SHEET 1 OF 1

5 4 3 2 1